To print at home, use heavy weight paper, or card stock. Cut out the cards along the dotted lines. If you're unable to print on both sides, you can simply fold on the center line to make a 2-sided card.

If you use a professional printer, we suggest you print 2-sided cards with white text on red card stock with rounded corners.

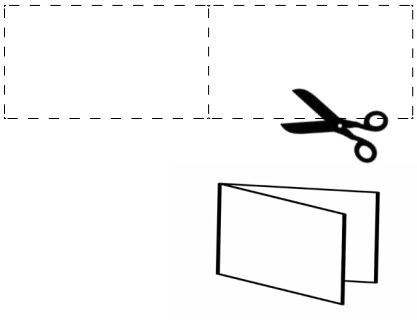

You have constitutional rights:

• DO NOT OPEN THE DOOR if an immigration agent is knocking on the door.

• DO NOT ANSWER ANY QUESTIONS from an immigration agent if they try to talk to you. You have the right to remain silent.

• DO NOT SIGN ANYTHING without first speaking to a lawyer. You have the right to speak with a lawyer.

• If you are outside of your home, ask the agent if you are free to leave and if they say yes, leave calmly.

• GIVE THIS CARD TO THE AGENT. If you are inside of your home, show the card through the window or slide it under the door.

I do not wish to speak with you, answer your questions, or sign or hand you any documents based on my 5th Amendment rights under the United States Constitution.

I do not give you permission to enter my home based on my 4th Amendment rights under the United States Constitution unless you have a warrant to enter, signed by a judge or magistrate with my name on it that you slide under the door.

I do not give you permission to search any of my belongings based on my 4th Amendment rights.

I choose to exercise my constitutional rights.

These cards are available to citizens and noncitizens alike.

You have constitutional rights:

• DO NOT OPEN THE DOOR if an immigration agent is knocking on the door.

• DO NOT ANSWER ANY QUESTIONS from an immigration agent if they try to talk to you. You have the right to remain silent.

• DO NOT SIGN ANYTHING without first speaking to a lawyer. You have the right to speak with a lawyer.

• If you are outside of your home, ask the agent if you are free to leave and if they say yes, leave calmly.

• GIVE THIS CARD TO THE AGENT. If you are inside of your home, show the card through the window or slide it under the door.

I do not wish to speak with you, answer your questions, or sign or hand you any documents based on my 5th Amendment rights under the United States Constitution.

I do not give you permission to enter my home based on my 4th Amendment rights under the United States Constitution unless you have a warrant to enter, signed by a judge or magistrate with my name on it that you slide under the door.

I do not give you permission to search any of my belongings based on my 4th Amendment rights.

I choose to exercise my constitutional rights.

These cards are available to citizens and noncitizens alike.

You have constitutional rights:

• DO NOT OPEN THE DOOR if an immigration agent is knocking on the door.

• DO NOT ANSWER ANY QUESTIONS from an immigration agent if they try to talk to you. You have the right to remain silent.

• DO NOT SIGN ANYTHING without first speaking to a lawyer. You have the right to speak with a lawyer.

• If you are outside of your home, ask the agent if you are free to leave and if they say yes, leave calmly.

• GIVE THIS CARD TO THE AGENT. If you are inside of your home, show the card through the window or slide it under the door.

I do not wish to speak with you, answer your questions, or sign or hand you any documents based on my 5th Amendment rights under the United States Constitution.

I do not give you permission to enter my home based on my 4th Amendment rights under the United States Constitution unless you have a warrant to enter, signed by a judge or magistrate with my name on it that you slide under the door.

I do not give you permission to search any of my belongings based on my 4th Amendment rights.

I choose to exercise my constitutional rights.

These cards are available to citizens and noncitizens alike.

You have constitutional rights:

• DO NOT OPEN THE DOOR if an immigration agent is knocking on the door.

• DO NOT ANSWER ANY QUESTIONS from an immigration agent if they try to talk to you. You have the right to remain silent.

• DO NOT SIGN ANYTHING without first speaking to a lawyer. You have the right to speak with a lawyer.

• If you are outside of your home, ask the agent if you are free to leave and if they say yes, leave calmly.

• GIVE THIS CARD TO THE AGENT. If you are inside of your home, show the card through the window or slide it under the door.

I do not wish to speak with you, answer your questions, or sign or hand you any documents based on my 5th Amendment rights under the United States Constitution.

I do not give you permission to enter my home based on my 4th Amendment rights under the United States Constitution unless you have a warrant to enter, signed by a judge or magistrate with my name on it that you slide under the door.

I do not give you permission to search any of my belongings based on my 4th Amendment rights.

I choose to exercise my constitutional rights.

These cards are available to citizens and noncitizens alike.